Qimarox®

Fast and efficient palletising

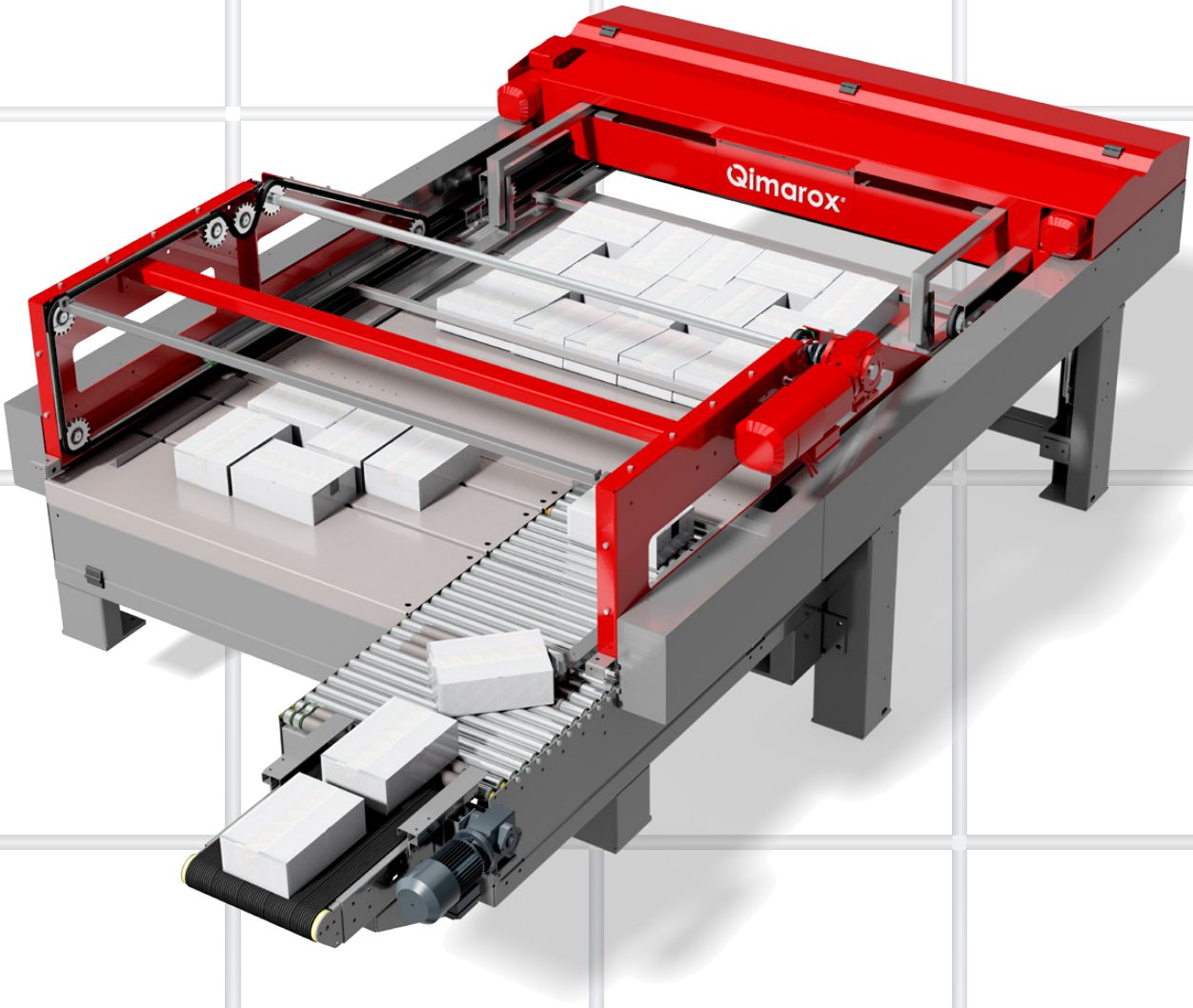

Whitepaper Palletising

Contents - A comparison of different palletiser systems

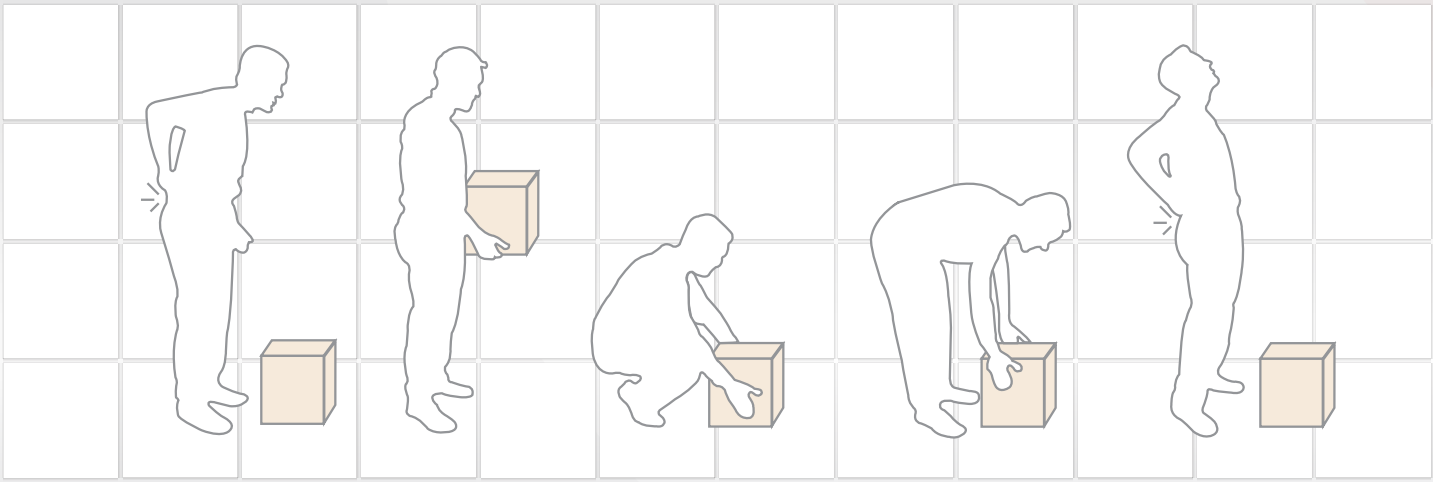

1. Why palletising?

Approximately half a billion pallets are generated each year in various formats worldwide with just one goal: a more efficient transport of products. Thanks to this product carrier, the number of physical actions in the entire chain from the producer to the end user is largely limited to moving the pallet, which can hold dozens and sometimes hundreds of products. The products themselves only need to be picked up when stacking and destacking of the pallets.

Stacking (or 'palletising'), in particular, is a job that needs to be done carefully, since the stack must be stable enough to withstand being transported by forklift or truck. Several smart palletiser systems have therefore been developed since the emergence of the pallet more than a hundred years ago. Three systems will be compared in this white paper: the conventional palletiser, the standard palletiser robot, and the Highrunner by Qimarox.

You might be asking yourself why a person would want to automate pallet stacking. There are various reasons:

1 • **Ergonomics.**
Stacking pallets manually is hard work. People have to constantly turn, bend and sometimes even stretch forward with products that can weigh many kilograms. Moreover, pallet stacking often involves highly frequent and repetitive movements, which can easily lead to physical problems over an eight-hour work day. Especially now that the workforce of many companies is ageing rapidly, ergonomics has become a real concern.

2 • **Capacity.**
Machines can stack pallets much faster than humans. Of course, you could call in the help of multiple people, but they would very soon start getting in each other's way. In addition, unlike machines, people get tired, so their capacity will decrease as the working day progresses. And finally: unlike humans, machines can work day and night.

3 • **Qualtiy.**
The stability of a pallet will depend largely on how well it was stacked. This means that every product should preferably be stacked on the pallet with millimetric precision. People are much less precise than machines and their concentration decreases over time. Moreover, machines don't make stacking pattern errors.

4 • **Cost.**
Figures from Statistics Netherlands (CBS) show that wage costs in the manufacturing and logistics sectors have increased by thirty to forty per cent over the past decade. At the same time, the cost of mechanisation and automation has dropped. This means that investing in a palletiser has become an attractive option for virtually any business, as shown in the rough calculation in the table below. The calculations do not include the costs of absenteeism due to physical problems.

Deployment period	Cost of manual palletising per year*	Investment cost palletiser	Return time
One shift (8 hours/day, 40 hours/week)	€ 60,000	€ 100,000	20 months
Two shifts (16 hours/day, 80 hours/week)	€ 120,000	€ 100,000	10 months
3 shifts (24 hours/day, 120 hours/week)	€ 180,000	€ 100,000	7 months
5 shifts (24 hours/day, 168 hours/week)	€ 252,000	€ 100,000	5 months

*These costs are based on the deployment of one employee who costs €30 euros per hour.

" Besides all these drawbacks, manual palletising simply isn't a fun job. Now that motivated employees are increasingly difficult to find and retain, this may be a good reason to switch to a palletiser or robotic palletiser. „

2. Comparison of four solutions

For a long time, the purchase of a palletiser was the only way to automate the palletising process. In a palletiser, the products are first pushed together until they form a complete pallet layer, after which the whole layer is pushed onto the pallet in a single movement. In the last few decades, robotic systems have become much more commonplace. The mark of a robotic system is that it doesn't slide the products forward but instead picks them up and deposits them on the pallet in one smooth motion. Qimarox has developed a new palletiser which combines the advantages of both solutions under the name 'Highrunner'. What exactly are the advantages and disadvantages of each solution?

2.1 Conventional palletisers

Most palletisers work on the same principle. The products arrive on a roller conveyor, stop at the right moment, and are then slid sideways on an iron plate once a complete row has been formed. Then, a new row is formed on the roller conveyor that ends up on the plate in an identical manner, tightly packed against the previous row. As soon as there is a complete pallet layer on the plate, the plate is manoeuvred above the pallet and moved away, such that the products end up on the pallet in the correct pattern. Conventional palletisers usually have quite a high capacity. This is because several tasks are performed simultaneously. After all, products are not placed on the pallet one by one, but simultaneously in complete layers. On the other hand, the number of possible stacking patterns is rather limited, due to the way in which products are formed into rows and rows are formed into layers.

Flaps, arms or stamps

The difference between the various types of palletiser becomes clear with stacking patterns with gaps ('spacing') between the products. Spacing means that the machine should not press the products up against each other on the pattern-formation conveyor but should ensure that the products remain at a certain distance from each other. Controlling that distance is precision work. The more accurate the products are spaced, the greater the stability of the final stack will be. One trusted technique is to use flaps that come up between the rolls at the appropriate time to stop the products. One disadvantage is that the position of the flaps cannot be variably adjusted and will in any case depend on the distance between the rollers. A change of stacking pattern could mean that the whole system would have to be adapted. An alternative to flaps that is sometimes used is to use arms or stamps to stop the products or push them into place. However, these techniques are not necessarily very flexible. A change in stacking pattern will still result in long changeover times.

PLC control

A completely different technique is the use of PLC control to regulate the distance between the products. The PLC system will indicate when the product has passed a photocell and then switch the rollers off at exactly the right time so that the product will stop. Unlike with flap technique, the distance between the products can be variably adjusted by varying the amount of time that elapses between passing the photocell and switching off the rollers. However, this technique also has its shortcomings. If a product isn't positioned straight on the roller conveyor, the PLC system will base its calculations on the time at which the front tip of the product passes through the light barrier, causing the rollers to stop just a fraction too soon. It is also possible for a product to slip slightly when the rollers stop, causing it to stop a fraction too late. Finally, wear and tear in the form of stretch in the drive belt or drive chain slack can cause inaccurate product positioning. An inaccuracy of only a few millimetres can already give rise to disturbances in the process. In practice, it frequently happens that a machine will run fine right after being started, but start to hitch after a half day. There are also examples of machines being perfectly adjusted during the winter, but which stop working properly once temperatures rise in the summer, which can affect the friction between product and roller.

Customisation

Most manufacturers only start building a palletiser once they have received an order. This allows them to build a machine which is designed entirely according to the specifications of the customer. Each palletiser is therefore unique, leading to high service and maintenance costs. For example, parts have limited exchangeability and sometimes even need to be custom made. Moreover, conventional palletisers are relatively susceptible to wear and require regular maintenance due to the large number of moving parts. In contrast, the technique (including the standard PLC control system) is relatively simple, so that a large portion of the scheduled and unscheduled maintenance can be carried out by an internal technical department. The machine itself takes up little space, but a bit more space is often required to integrate it into an end-of-line packaging line. This is because products can be fed in only one way, so that sometimes – depending on the layout – adjustments to the supply track are needed, in the form of bends or right-angled transfer mechanisms. In addition, it is often necessary to install an extra batching conveyor and/or turning conveyor upstream from the pattern-formation conveyor. The batching conveyor serves to separate products supplied in a continuous stream, while the turning conveyor serves to rotate the products 90 degrees, if necessitated by the stacking pattern.

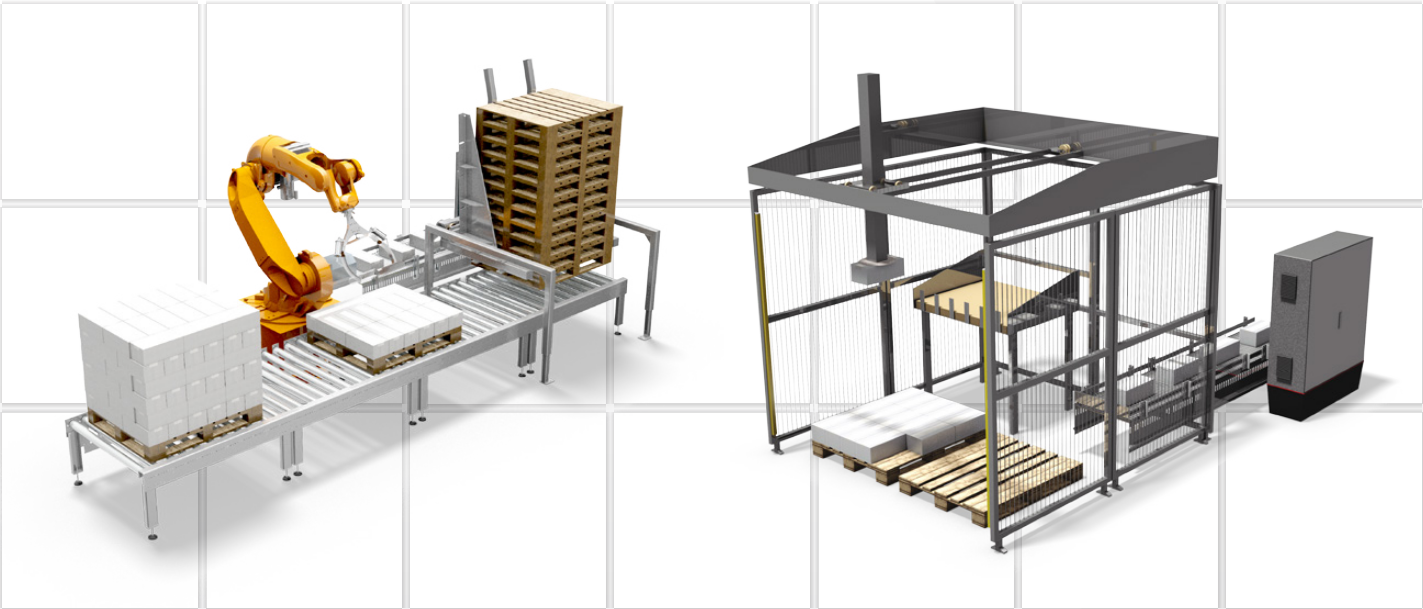

2.2 Articulated arm and portal robots

The distinguishing feature of palletiser robots is that each product is picked up with a grabber. The robot uses coordinates to determine exactly how a gripper must be manoeuvred in order to pick up a product from a roller conveyor and deposit it at the correct position on a pallet. An extra turning conveyor to turn products a quarter turn is not required. While the products are being moved by the gripper they can be rotated any desired angle and if necessary even tilted. Palletiser robots are used in two different configurations. The most recognisable is the articulated-arm robot, a robotic arm that can rotate 360 degrees around the pivot it is attached to. Articulated arm robots are standard machines that are in operation all across the globe. They are not only used for palletising but also for other tasks. The range of an articulated arm robot is limited by the length of the arm. In contrast to an articulated arm robot, the range of a portal robot can be made as large as is desirable. As the name implies, this robot is suspended from a portal frame. As a result, the gripper can be moved in different directions, in accordance with the dimensions of the portal structure. This allows a portal robot to supply various final packaging lines and/or different pallets with great ease.

Flexibility vs capacity

The great advantage of robots when compared to conventional palletisers is their great flexibility. Since each product is picked up individually, it is possible to create almost any imaginable stacking pattern. However, this greater flexibility comes at the expense of capacity. Because the products are placed on the pallet one by one instead of per layer, more time is required to stack each pallet. A single stacking operation can easily take five to seven seconds. Shorter is generally not possible because the greater speeds would exercise too great a force on the packages and thus cause breakages. The capacity per robot is therefore limited to about seven hundred products per hour. If more capacity is required, multiple robots are often connected in parallel or in series. Higher capacities can also be achieved by having palletiser robots or conventional palletisers place multiple products on a single pallet. In such cases, robots must be used in combination with pre-forming conveyors. These are machines that push the products to form rows or layers just like conventional palletisers, after which the robot places the complete row or layer on a pallet in one go. However, as with conventional palletisers, the higher capacity of these hybrid machines comes at the expense of stacking pattern flexibility.

Programming stacking pattern

One point requiring attention is the creation of new stacking patterns. Because the control software of these robots is not based on standard PLC technology (as with conventional palletisers), companies seeking to create new stacking patterns must often call in the help of a programmer from the robot manufacturer. Although manufacturers try address these challenges by offering special design programs, their usefulness is limited in practice. While they allow you to set different coordinates for picking up or depositing products, they fail to optimise the complete movement of the robot arm. It is precisely this movement that determines the duration of a single stacking operation and thus the capacity of the robot. In addition, tolerances play a major role, for example, variations in box dimensions. Not every box is exactly the same size. In addition, sometimes boxes bulge or sag, so that dimensions in practice may be greater than in theory. Because the coordinates of the pick-up position are based on the centre of the box, small dimensional variations can cause problems when depositing the products. Imagine, for example, a situation where a product touches a previously deposited product and tilts. To prevent problems such as this, extra wide margins of tolerance are often employed when using robots, which can in turn lead to other problems. Take for example the subsidence of boxes because the box walls are not exactly above each other.

Changing the gripper

One point requiring attention is the creation of new stacking patterns. There are several techniques used to pick up products. One commonly used solution involves vacuum technology, where products are picked up from above via a suction cup. This technique works fine with good quality for boxes, but can cause problems if the company suddenly switches to cheaper boxes made of porous cardboard. What's more, vacuum-based systems are not really suitable for products such as trays or buckets. An alternative is the use of clamps, which pick up the product at the sides. With delicate products, a fork is often used to pick up the products from below, often supplemented with a stamp which holds the product in place from above. Which gripper is suitable will vary from product to product. Sometimes it is necessary to develop a separate gripper for each product, which means that the gripper head will also need to be changed when changing products. This will also mean extra changeover time.

Complex technology

As mentioned above, robots – especially articulated arm robots – are standard machines that are currently in operation all across the globe. They are therefore relatively easy to integrate, partly because adjustments to the layout of final packaging lines are often limited. After all, it doesn't matter from which direction products are supplied or how pallets are removed. A robot can be used in any setup, as long as the coordinates of the pick-up and put-down positions fall within the range. The use of vision technology makes integration even easier. Products can be supplied unsorted, while pallets no longer need to be supplied with millimetric precision. Sometimes concrete floors need to be strengthened because of the large point load on the pivot point of the articulated arm robot. Compared to conventional palletisers, robots have fewer moving parts and are thus less susceptible to wear and breakdown. On the other hand, the technology is complex, meaning companies will often have to rely on the supplier for maintenance. Although the robots themselves might require little maintenance, all the extra technology (in the form of grippers and any pre-forming conveyors) mean that the system as a whole may still require a significant amount of attention by the technical department. Operating a palletiser robot will also require staff with more skills than would be needed to run a conventional palletiser, especially when it comes to solving simple malfunctions.

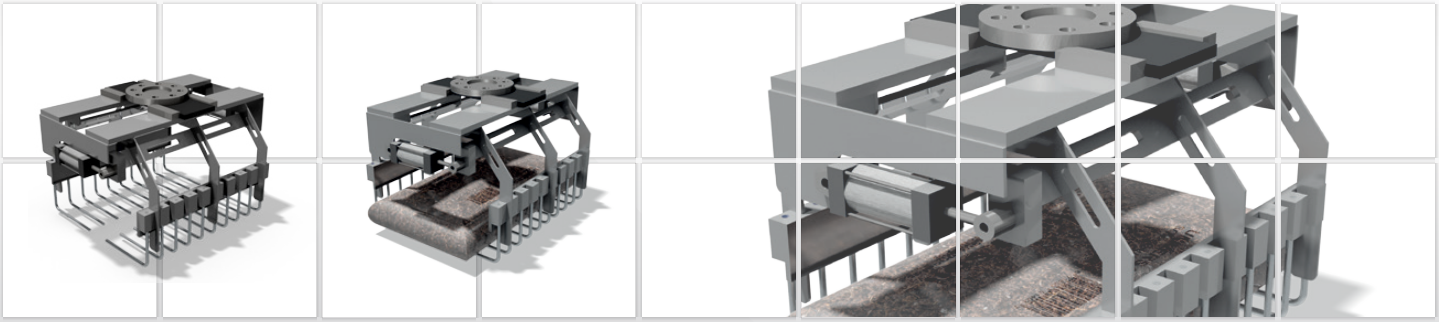

2.3 Highrunner mk7

Qimarox's Highrunner mk7 is an innovative palletiser that combines the capacity of a conventional palletiser with the flexibility of a palletising robot. What sets the Highrunner mk7 apart from conventional palletisers is its patented, infinitely adjustable pattern-formation slider, which allows any product to be carefully and accurately positioned according to almost any imaginable stacking pattern. Unlike with conventional machines, the Highrunner mk7 allows you to adjust the spacing between the products to within a millimetre, which makes for fewer problems and more stable pallets. With its pattern-formation slider it is even possible to rotate products a quarter of a turn. The pattern-formation slider then chooses a position such that one side of the product comes up against the slider, after which the other side will make a smooth turn of 90° due to the moving belt. The slider also automatically ensures that each product is properly aligned. The installation of a separate turning conveyor is therefore no longer necessary, unless needed to achieve the desired capacity.

Pattern-formation conveyor maintain altitude

The Highrunner mk7 has a larger capacity than most conventional palletisers thanks to a number of clever design modifications. First of all, the pattern-formation conveyor is always located at the same height as the top of the pallet. The plate on which new layers are formed only has to be slid over the pallet and pulled away to deposit the products. An elevator then ensures that the pallet is dropped one level, until the upper edge is located at the same height once again. This means the plate doesn't have to first be transported up, like in many conventional machines, which saves a lot of time. In addition, the various movements are disconnected, wherever possible. The products are first pushed together on the pattern-formation conveyor until they form a layer, and are only pushed onto the deposit plate once the layer is complete. This makes it possible to deposit one layer while the next is already being formed.

Supply and removal of pallets

Once a pallet is complete, the lift drops down to floor level, after which a roller conveyor removes the pallet. From the opposite direction, an empty pallet is simultaneously supplied, which is grabbed by the elevator and transported upwards. In situations where multiple Highrunner are placed next to each other, it is possible to use a single roller conveyor for supply and removal of all the pallets, both full and empty. In this Crossrunner concept, the roller conveyor passes beneath all the Highrunners, while the control system ensures that the supply and removal of pallets is aligned with activities of the machines to avoid collisions. If desired, it is possible to define priorities in the control system so as to avoid the last Highrunner in the line being unable to deposit its pallet because of all the other pallets on the roller conveyor. Thanks to the Crossrunner concept, a complex system of conveyors is no longer needed to carry away the multitude of pallets. This makes it possible to further reduce the space occupied by the already compact Highrunner even more.

Modular design

Unlike conventional machines, the Highrunner is a mature, standard machine, in which the number of moving parts has been reduced to a minimum. Moreover, mainly standard components have been used, which are easy to replace and freely available on the market. This makes the Highrunner a reliable and low-maintenance machine. Due to the fact that the system doesn't contain any drive belts and drive chains that are susceptible to backlash, the machine will continue to perform at a high level even after thousands of hours of operation. Thanks to its modular design, the machine is easy to integrate in any final packaging process, despite its high degree of standardisation. For example, by default the machine features side infeed, allowing products to be supplied left or right of the pattern-formation location. Companies that require a higher capacity, however, can also opt for the central infeed. Layers are then formed alternately to the left and right of the supply track, which allows multiple layers to be formed simultaneously. Finally, the Highrunner mk7 is also available with double infeed system, in which two supply tracks and two complete pattern-formation conveyors provide an extremely high capacity. Quimarox also has easy-to-integrate standard modules for placing non-slip sheets between pallet layers and wrapping pallets.

Simple and cheap to run

Besides being easy to maintain, the Highrunner is also easy to use, especially when compared to palletiser robots. Operators can easily change the stacking pattern using the touch screen of the control panel without having to physically adapt the machine. Operators can also easily create or customise stacking patterns using the same touchscreen. Finally, the Highrunner is extremely energy-efficient. As mentioned above, the machine has fewer moving parts than conventional palletisers and therefore uses less energy. It also uses less energy than palletising robots. For example, the Highrunner has as many drives as an articulated arm robot. While all the drives are continuously in operation in an articulated arm robot, they are only in operation for a short time in the Highrunner.

3. What to watch when automating

Purchasing a palletiser or palletiser robot first of all requires a careful analysis of the entire final packaging process. After all, which palletising solution will be suitable will differ from situation to situation. What are the central points requiring your attention?

- **Capacity.**
  The required capacity is of course important. How many products or pallets should the machine or robot be able to process per hour? The required capacity will depend on the speed of the production and final packaging lines that supply the products. Because a machine or robot will last for years, the capacity of the palletising solution should not only be sufficient for the present, but also for any future product flows. The future of the company is therefore important, as well as the trend of shrinking consumer packaging.

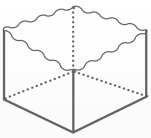

- **Packaging.**
  The palletising solution should be able to palletise all products offered, whether boxes, bags, buckets, cans, containers or trays (with or without cling film). Not all machines or robots can handle every packaging type equally well. In addition, the quality of the packaging is also important. Especially in the food industry, more and more cartons are being designed to be placed straight on the shelf, which include various openings and perforation lines that negatively affect their solidity. The machine or robot must also be able to stack these boxes on pallets too, without damaging the products.

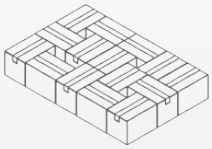

- **Stacking patterns.**
  Shapes and sizes often differ from product to product. In addition to the standard euro pallet (1200 x 800 mm), other pallet sizes are sometimes used, such as the block pallet (1200 x 1000 mm). All these different product and pallet shapes and sizes mean that the palletiser or palletiser robot should be able to handle different stacking patterns. Sometimes a certain amount of space needs to be retained between the products when stacking them rather than packing them tightly against each other. It is important to look at how flexible a solution is when using changing stacking patterns, with or without spacing. And what are the possible changeover times when changing stacking patterns?

- **Use of space.**
  Companies often have limited space for the installation of new machinery, especially if the production or final packaging lines have already been expanded over the years. The space occupied by a palletising solution is determined not only by the physical dimensions of a machine or robot, but by the number of machines or robots needed to achieve the required capacity. Smart designs, for example making use of height, will be an advantage.

- **Supply and removal capabilities.**
  A palletiser or palletiser robot doesn't exist in isolation but is always part of one or more final packaging lines. Which solution is preferable will therefore depend on how products and empty pallets can be supplied and full pallets can be removed again. Are the products supplied via one or more conveyors? Are the full pallets removed via a roller conveyor or is a forklift needed to pick them up and put them away? And how much buffer capacity needs to be built into the system? The way in which the system as a whole can be integrated will vary per solution.

- **Optional features.**
  Automating the palletising process often means more than just the use of machines or robots for stacking products on pallets. For example, it is sometimes necessary to place a separation sheet in-between each layer in order to ensure pallet stability. After palletising, it will often also be necessary to strap or wrap a pallet to further enhance stability. Finally, in the context of tracking & tracing, it is becoming increasingly important (especially in the food industry) to label pallets and link the contents of the pallet (including batch numbers or serial numbers) to the pallet number. Some solutions make it easier than others to integrate all of these extra steps in the palletising process.

- **Energy consumption.**
  Energy consumption is becoming an increasingly important topic in business management. Not only because high energy consumption leads to higher costs due to rising energy prices, but also because Corporate Social Responsibility (CSR) and the reduction of CO2 emissions are increasingly important topics these days. Some machines or robots consume more energy than others.

- **User-friendliness.**
  Automating the palletising process doesn't mean that people are no longer necessary. Human intervention is often required if the product or pallet size changes and a different stacking pattern needs to be selected. Sometimes it is even necessary to create a completely new stacking pattern, for example, with the introduction of a new product. In practice, the ease with which stacking patterns can be selected or created often determines the extent to which all the features of the palletising process can be exploited.

- **Vulnerability.**
  Automating the palletising process will entail an increased dependence on technology. If this technology should fail, this could lead to downtime; not only to downtime of the palletising process, but often also of the final packaging process, and possibly even the production process. The susceptibility to breakdowns and vulnerability of the technology used will differ per palletising solution.

- **Service life and maintenance.**
  Although a robot may require less maintenance than a palletiser, a machine will last longer. A machine can easily last fifteen to twenty years and can even be given a second life if reconditioned. After twelve to fifteen years, most articulated arm robots will have come to the end of their service life and need to be replaced in their entirely due to high repair costs.

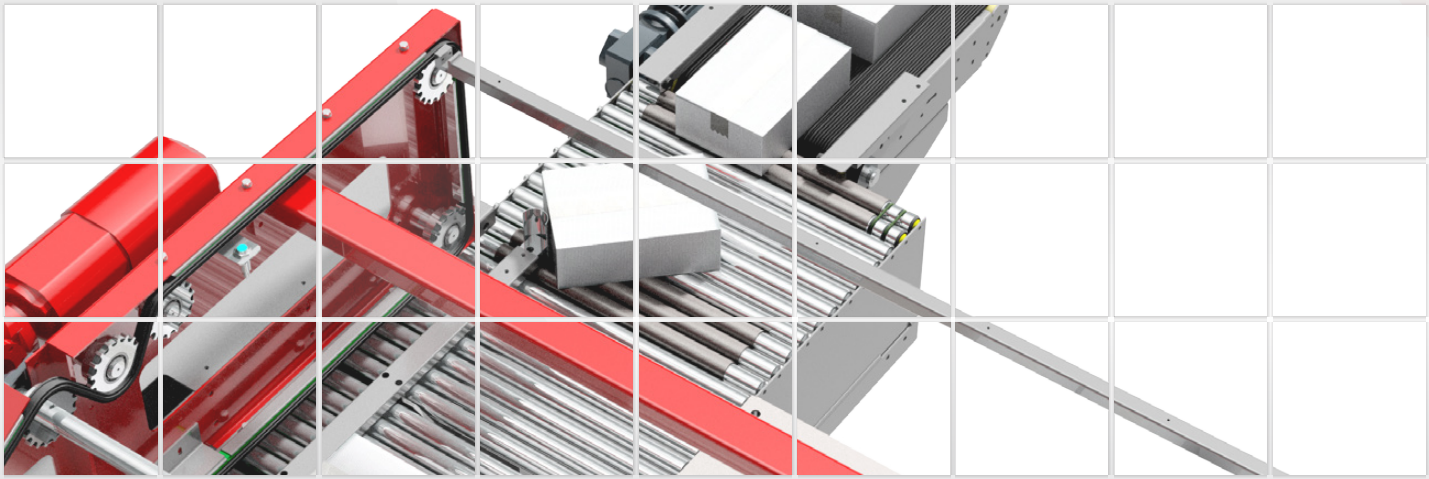

Pros and cons

The following table provides an overview of the advantages and disadvantages of the various palletising solutions.

Features	Conventional palletiser	Articulated arm robot	Portal robot	Highrunner Mk7	Crossrunner Mk7
Desired result					
Speed / Capacity	++	+/-	-	++	++
Flexibility (stacking patterns, pallet sizes, spacing, etc.)*	++	+/-	-	++	++
Quality of cardboard packaging	++	+/-	-	++	++
Integration					
Use of space	+/-	+/-	+	+	++
Supply capabilities of	-	++	+/-	-	-
Control	+	-	-	+	+
Educational level operator	+/-	-	-	+	+
Optional features					
Separation sheets *	+/-	-	-	+	+
Strapping	+	-	-	+	+
Wrapping	+	-	+	+/-	-
Doubling pallets	-	++	++	+/-	+/-
Operation					
Programming / configuring new stacking patterns	-	++	++	+	+
Changeover times	+/-	+	+	++	++
Maintenance	+/-	++	++	+	+
Service life	++	-	+/-	++	++
Reachability	+/-	+/-	-	+	++
Cost					
Purchasing costs	+/-	+/-	+/-	+/-	-
Installation costs	+	+/-	+	+/-	++
Running costs (energy costs)	+	-	+/-	+	+
Maintenance cost	+	+/-	-	+	+
Spare parts	+	-	-	+	+
Damage risk machine	-	+	+	-	-
Damage risk product	+/-	-	-	+	+

*In combination with capacity

“ In addition to the various issues mentioned above, the costs of a palletising solution will of course also be an important consideration. These costs will include things such as its purchase cost, installation cost and operating and maintenance cost. Almost all the items mentioned above will affect these costs to a lesser or greater extent. The question is: how do these costs relate to the benefits? In other words, what is the payback period of each possible solution? ”

Qimarox®

4. Conclusions

This white paper doesn't provide a ready-made answer to the question of which palletising solution is preferable. This will very much depend on the situation in which the palletising solution will be implemented and the requirements and wishes of the company. We can, however, draw a number of conclusions based on the analysis in this paper.

The first conclusion is that the Highrunner mk7 is almost always preferable to a conventional palletiser. The Highrunner mk7 is at least as fast, offers more flexibility, and more advantages in terms of use and maintenance. In addition, as a result of the years of development and the high degree of standardisation, the Highrunner is between 15 to 30 percent cheaper than conventional machines.

The second conclusion is that the costs of a Highrunner mk7 are similar to those of articulated arm robot. For the same amount, an articulated arm robot can operate multiple production lines, but is more limited in terms of capacity. The Highrunner mk7 can only be used for one type of product at once, but offers much higher capacity because complete layers can be processed simultaneously. You can also deposit complete layers on a pallet using articulated arm robot, but to do so you will need to take measures that will be at the expense of the benefits of a robot and start pre-forming.

In short, if the situation calls for a flexible, high capacity palletising solution, the Highrunner mk7 comes out on top.

Qimarox can guarantee short delivery times because the Highrunner mk7 is built using standard components. In addition, Qimarox has an extensive network of partners worldwide, who can install and integrate the Highrunner mk7 on every continent. Choosing the Highrunner mk7 means you will be able to quickly get started with a cheap, reliable and flexible palletising solution.